8847

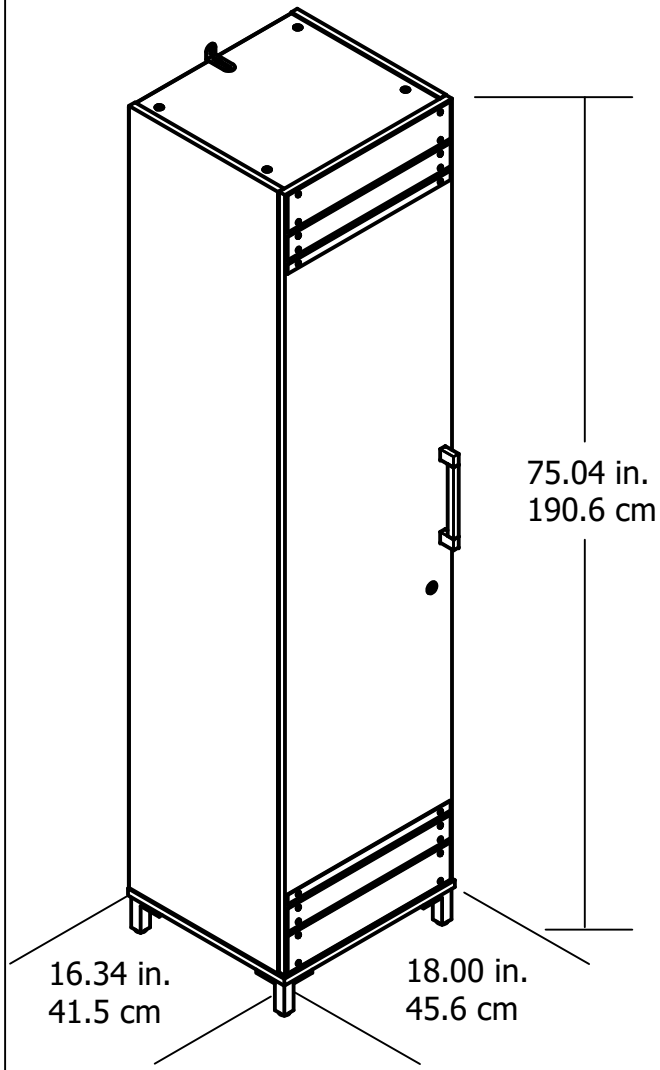

Interior Storage dimensions:
upper section
(2) storage spaces (adj heights)
16.5 in. (41.8 cm) W
32.6 in. (82.8 cm) H
14.7 in. (37.3 cm) D

4.56 cubic feet storage area

Interior Storage dimensions:
lower section
(2) storage spaces (adj heights)
16.5 in. (41.8 cm) W
37.3 in. (94.6 cm) H
14.7 in. (37.3 cm) D

5.21 cubic feet storage area

Wood Breakdown: 90%
Total storage: 9.77 cubic feet

Overall Product Size:
18.00"W x 16.34"D x 75.04"H
45.6cm W x 41.5cm D x 190.6cm H

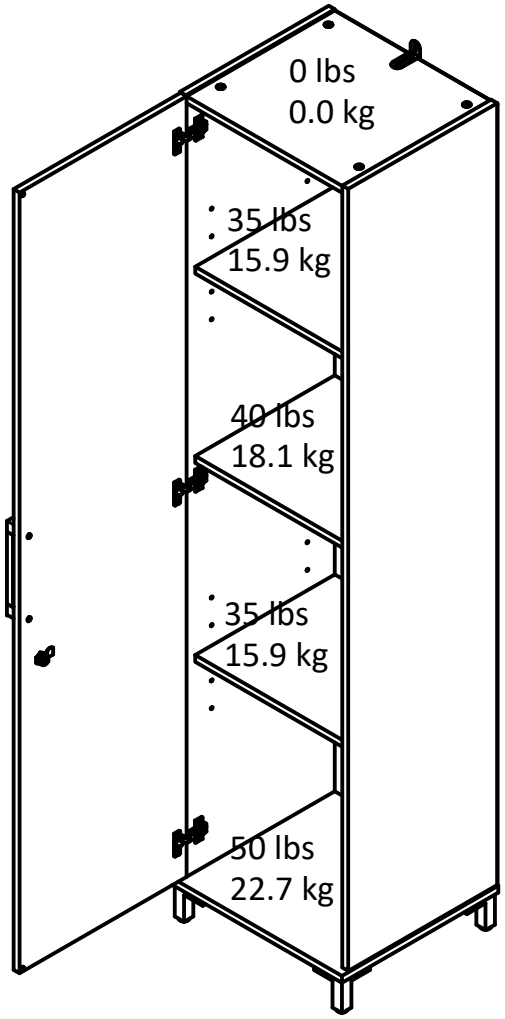

Maximum Weight Capacities
Unit Weight: 77 lbs. (34.9 kg)